hardscapeproducts.co.uk
01204 565 500
products@hardscape.co.uk

Edging 150

150x400 | Radius | L-1180 | External | 0.75m | Rounded | SQ

SPECIFICATION

Edging 150 | 150x400 | Radius | L-1180 | External | 0.75m | Rounded | SQ
SKU: ATK-EDG-003-5197

Material	Concrete, Kellen
Finish	Standard Wet Cast, Lavaro
Size	150(w) x 400(d) x 1180(l)
Weight Per Unit	139.9kg
Manufacturing Standard	BS EN 1340:2003
Density	2350 kg/m³
GWP (total) kgCO2e	14.91 kgCO2e/unit
Dutch Ref.	GAZONBOCHTBANDEN-KWARTROND-15x40xL118-0.75m-VL
Type	Radius External
End Style	SQ
Profile	150x400
Position	-
Face	Rounded
Face Angle	-
Return Angle	-
Radius	0.75m
Number per 360	4
Slope Angle	-
Slope Gradient	-

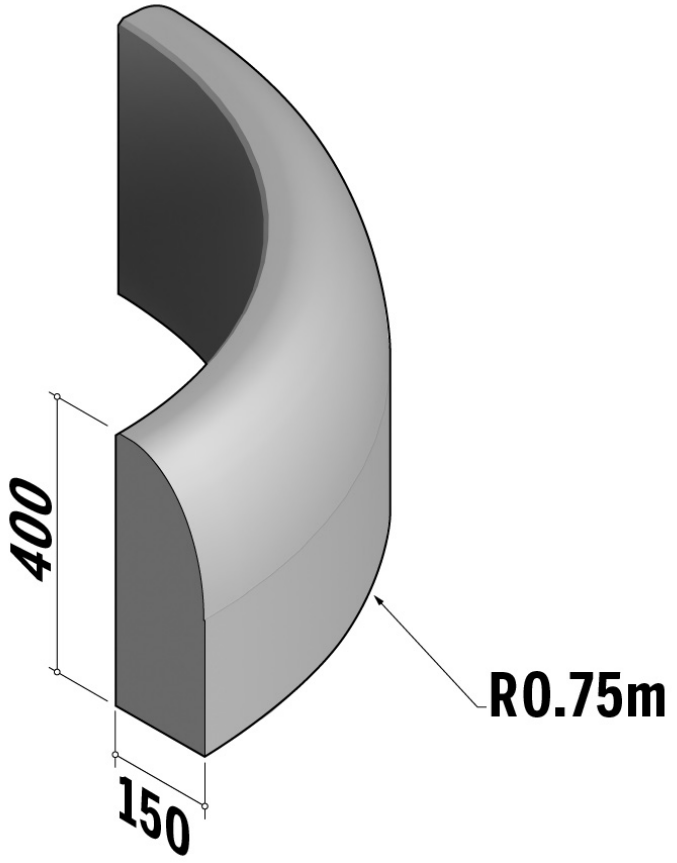

Active Travel Kerbs are available in a range of colours, finishes and materials.

Specification & technical data is indicative and subject to change. Images are for illustrative purposes only, details may vary. Some data may vary according to colour / material / finish variation.