hardscapeproducts.co.uk
01204 565 500
products@hardscape.co.uk

Edging 120

120x250 | Radius | L-600 | Internal | 0.38m | Rounded | HD

SPECIFICATION

Edging 120 | 120x250 | Radius | L-600 | Internal | 0.38m | Rounded | HD

SKU: ATK-EDG-002-5185

Material	Concrete, Kellen
Finish	Standard, Lavaro
Size	120(w) x 250(d) x 600(l)
Weight Per Unit	41.54kg
Manufacturing Standard	BS EN 1340:2003
Density	2350 kg/m³
GWP (total) kgCO2e	4.43 kgCO2e/unit
Dutch Ref.	GAZONBOCHTBANDEN-KWARTROND-12x25xL60-0.38m-HD-inw
Type	Radius Internal
End Style	HD
Profile	120x250
Position	-
Face	Rounded
Face Angle	-
Return Angle	-
Radius	0.38m
Number per 360	4
Slope Angle	-
Slope Gradient	-

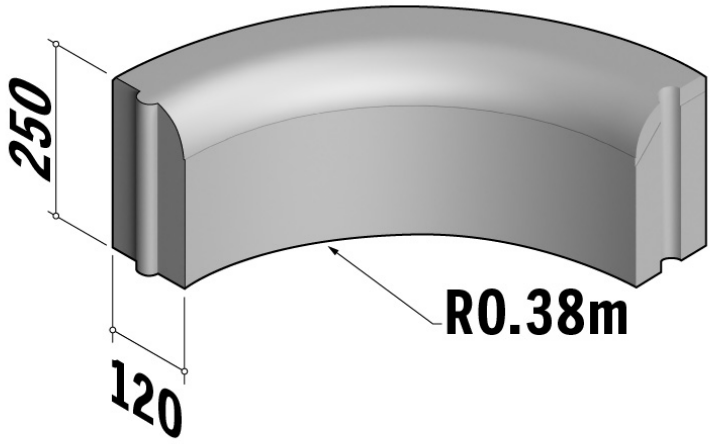

Active Travel Kerbs are available in a range of colours, finishes and materials.

Specification & technical data is indicative and subject to change. Images are for illustrative purposes only, details may vary. Some data may vary according to colour / material / finish variation.