hardscapeproducts.co.uk
01204 565 500
products@hardscape.co.uk

Civils & Highways / Active Travel Kerbs / Cycle

Cycle 40-120x250

40-120x250 | Radius | L-785 | Internal | 10m | Splay | HD

SPECIFICATION

Cycle 40-120x250 | 40-120x250 | Radius | L-785 | Internal | 10m | Splay | HD

SKU: ATK-CYC-003-6567

Material	Concrete, Kellen
Finish	Standard, Optiflex, Lavaro
Size	40-120(w) x 250(d) x 785(l)
Weight Per Unit	49.5kg
Manufacturing Standard	BS EN 1340:2003
Density	2350 kg/m³
GWP (total) kgCO2e	5.27 kgCO2e/unit
Dutch Ref.	RIJWIELPADBOCHTBANDEN-4-12x25xL78.5-10m-HD-inw
Type	Radius Internal
End Style	HD
Profile	40-120x250
Position	-
Face	Splay
Face Angle	32°
Return Angle	-
Radius	10m
Number per 360	80
Slope Angle	-
Slope Gradient	-

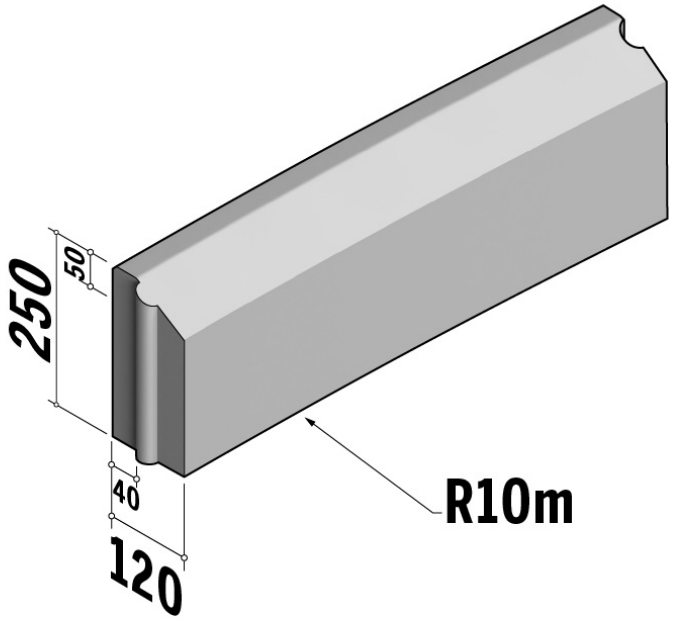

Active Travel Kerbs are available in a range of colours, finishes and materials.

Specification & technical data is indicative and subject to change. Images are for illustrative purposes only, details may vary. Some data may vary according to colour / material / finish variation.