hardscapeproducts.co.uk
01204 565 500
products@hardscape.co.uk

Bus Stop HOV

250-300x400 | Transition | to 280-300x340 | L-2000 | Right | Half-Battered | VVBVB

SPECIFICATION

Bus Stop HOV | 250-300x400 | Transition | to 280-300x340 | L-2000 | Right | Half-Battered | VVBVB

SKU: ATK-BUS-001-6741

Material	Concrete, Kellen
Finish	ZVB, Lavaro
Size	250-300(w) x 400(d) x 2000(l)
Weight Per Unit	530kg
Manufacturing Standard	BS EN 1340:2003
Density	2350 kg/m³
GWP (total) kgCO2e	56.47 kgCO2e/unit
Dutch Ref.	HOV-VERLOOPBANDEN-25-30x40_28-30x34xL200-VVBVB-RECHTS
Type	Transition
End Style	VVBVB
Profile	250-300x400
Position	Right
Face	Half-Battered
Face Angle	74°
Return Angle	-
Radius	-
Number per 360	-
Slope Angle	-
Slope Gradient	-

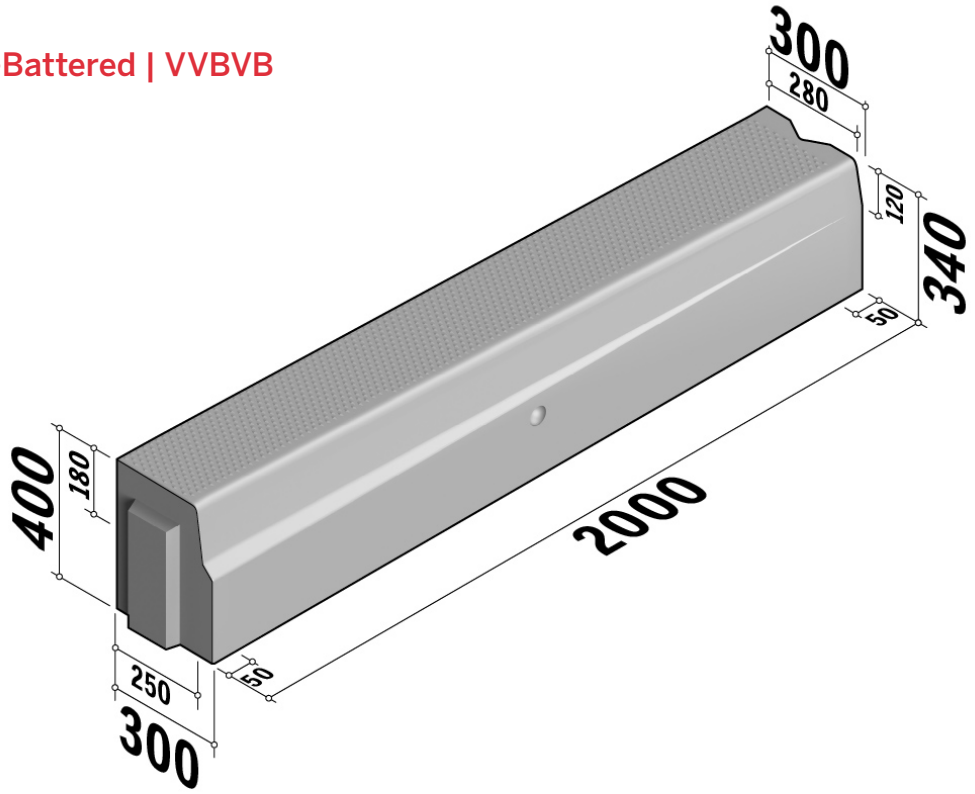

Active Travel Kerbs are available in a range of colours, finishes and materials.

Specification & technical data is indicative and subject to change. Images are for illustrative purposes only, details may vary. Some data may vary according to colour / material / finish variation.