Civils & Highways / Active Travel Kerbs / Boundary

Boundary 150

150x250 | Radius | L-785 | External | 4m | Flat | HD

SPECIFICATION

Boundary 150 | 150x250 | Radius | L-785 | External | 4m | Flat | HD

SKU: ATK-BOU-008-5086

Material	Concrete, Kellen
Finish	Standard, Optiflex, Lavaro
Size	150(w) x 250(d) x 785(l)
Weight Per Unit	69.18kg
Manufacturing Standard	BS EN 1340:2003
Density	2350 kg/m³
GWP (total) kgCO2e	7.37 kgCO2e/unit
Dutch Ref.	OPSLUITBOCHTBANDEN-15x25xL78.5-4m-HD
Type	Radius External
End Style	HD
Profile	150x250
Position	-
Face	Flat
Face Angle	-
Return Angle	-
Radius	4m
Number per 360	32
Slope Angle	-
Slope Gradient	-

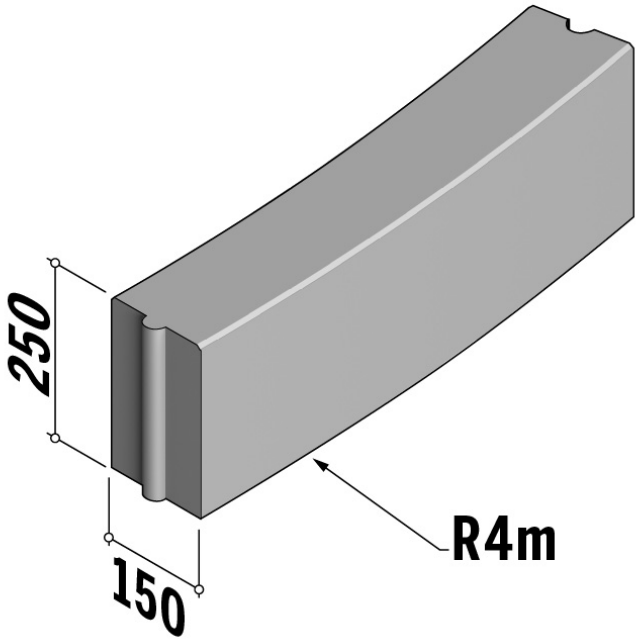

Active Travel Kerbs are available in a range of colours, finishes and materials.

Specification & technical data is indicative and subject to change. Images are for illustrative purposes only, details may vary. Some data may vary according to colour / material / finish variation.