hardscapeproducts.co.uk
01204 565 500
products@hardscape.co.uk

Boundary 100 HD

100x300 HD | Straight | L-1000 | Flat | HD

SPECIFICATION

Boundary 100 HD | 100x300 HD | Straight | L-1000 | Flat | HD

SKU: ATK-BOU-004-5042

Material	Concrete
Finish	Standard
Size	100(w) x 300(d) x 1000(l)
Weight Per Unit	70.5kg
Manufacturing Standard	BS EN 1340:2003
Density	2350 kg/m³
GWP (total) kgCO2e	7.51 kgCO2e/unit
Dutch Ref.	OPSLUITBANDEN-10x30xL100-HD
Type	Straight
End Style	HD
Profile	100x300
Position	-
Face	Flat
Face Angle	-
Return Angle	-
Radius	-
Number per 360	-
Slope Angle	-
Slope Gradient	-

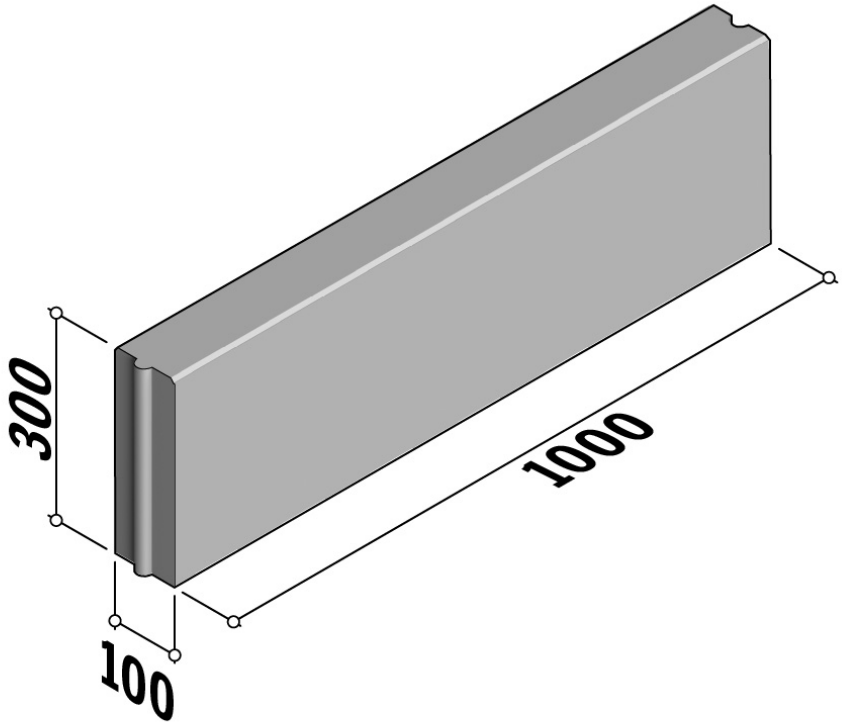

Active Travel Kerbs are available in a range of colours, finishes and materials.

Specification & technical data is indicative and subject to change. Images are for illustrative purposes only, details may vary. Some data may vary according to colour / material / finish variation.