Civils & Highways / Active Travel Kerbs / Boundary

Boundary 80

80x200 | Transition | to 30-80x200 | L-1000 | Flat | HDHD

SPECIFICATION

Boundary 80 | 80x160 | Transition | to 30-80x200 | L-1000 | Flat | HDHD

SKU: ATK-BOU-003-5024

Material	Concrete, Kellen
Finish	Standard, Lavaro
Size	80(w) x 160(d) x 1000(l)
Weight Per Unit	32.5kg
Manufacturing Standard	BS EN 1340:2003
Density	2350 kg/m³
GWP (total) kgCO2e	3.46 kgCO2e/unit
Dutch Ref.	VERLOOPBANDEN-8x16_3-8x20xL100-HDHD
Type	Transition
End Style	HDHD
Profile	80x160
Position	-
Face	Flat_Splay
Face Angle	-
Return Angle	-
Radius	-
Number per 360	-
Slope Angle	-
Slope Gradient	-

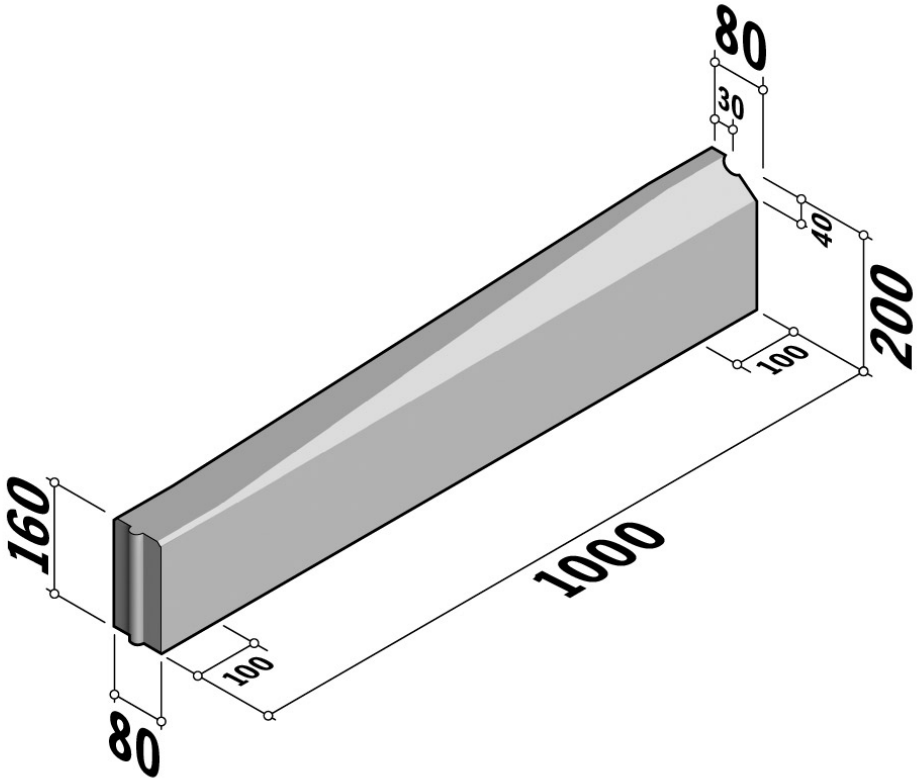

Active Travel Kerbs are available in a range of colours, finishes and materials.

Specification & technical data is indicative and subject to change. Images are for illustrative purposes only, details may vary. Some data may vary according to colour / material / finish variation.