hardscapeproducts.co.uk
01204 565 500
products@hardscape.co.uk

Boundary 60

60x200 | Radius | L-785 | External | 3m | Flat | HD

SPECIFICATION

Boundary 60 | 60x200 | Radius | L-785 | External | 3m | Flat | HD

SKU: ATK-BOU-002-5005

Material	Concrete
Finish	Standard
Size	60(w) x 200(d) x 785(l)
Weight Per Unit	22.14kg
Manufacturing Standard	BS EN 1340:2003
Density	2350 kg/m³
GWP (total) kgCO2e	2.36 kgCO2e/unit
Dutch Ref.	OPSLUITBOCHTBANDEN-6x20xL78.5-3m-HD
Type	Radius External
End Style	HD
Profile	60x200
Position	-
Face	Flat
Face Angle	-
Return Angle	-
Radius	3m
Number per 360	24
Slope Angle	-
Slope Gradient	-

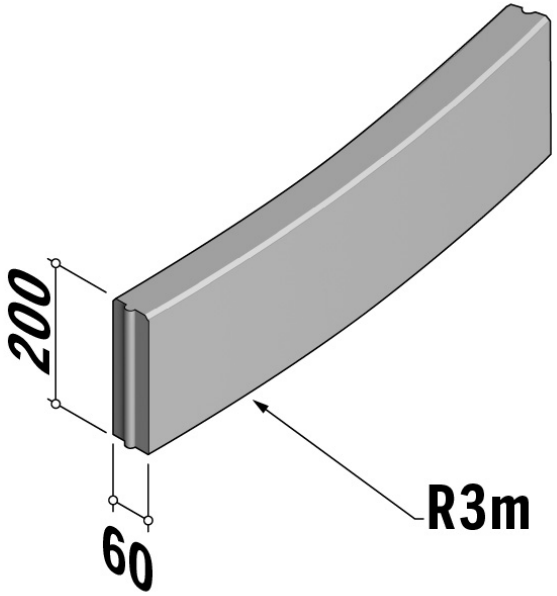

Active Travel Kerbs are available in a range of colours, finishes and materials.

Specification & technical data is indicative and subject to change. Images are for illustrative purposes only, details may vary. Some data may vary according to colour / material / finish variation.