HARDSCAPE PRODUCTS

hardscapeproducts.co.uk
01204 565 500
products@hardscape.co.uk

Active Travel Kerbs from HARDSCAPE

Civils & Highways / Active Travel Kerbs / Bump

Bump 200

200x180 | Straight | L-940 | Middle | Rounded | SQ

SPECIFICATION

Bump 200 | 200x180 | Straight | L-940 | Middle | Rounded | SQ

SKU: ATK-BMP-003-6822

Material	Concrete, Kellen
Finish	Standard Wet Cast, Optiflex, Lavaro
Size	200(w) x 180(d) x 940(l)
Weight Per Unit	70.03kg
Manufacturing Standard	BS EN 1340:2003
Density	2350 kg/m³
GWP (total) kgCO2e	7.46 kgCO2e/unit
Dutch Ref.	STOOTBANDEN-MET-HAAKSE-HOEKEN-20x18xL94-2X-VLAK
Type	Straight
End Style	SQ
Profile	200x180
Position	Middle
Face	Rounded
Face Angle	-
Return Angle	-
Radius	-
Number per 360	-
Slope Angle	-
Slope Gradient	-

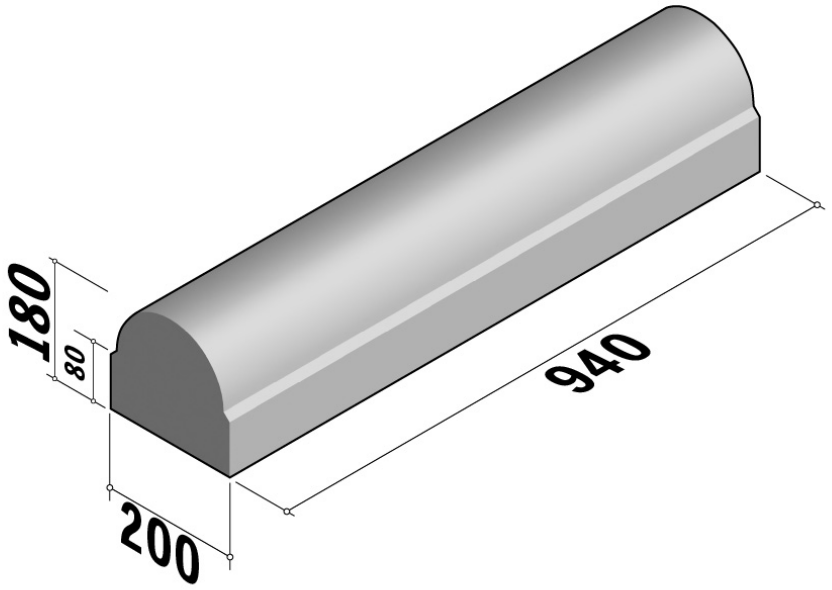

Active Travel Kerbs are available in a range of colours, finishes and materials.

Specification & technical data is indicative and subject to change. Images are for illustrative purposes only, details may vary. Some data may vary according to colour / material / finish variation.