hardscapeproducts.co.uk
01204 565 500
products@hardscape.co.uk

Access 250-130x240

250-130x240 | End | L-1000 | Right | Splay | HD

SPECIFICATION

Access 250-130x240 | 250-130x240 | End | L-1000 | Right | Splay | HD

SKU: ATK-ACC-008-6693

Material	Concrete, Kellen
Finish	Standard Wet Cast, Optiflex, Lavaro
Size	250-130(w) x 240(d) x 1000(l)
Weight Per Unit	113.7kg
Manufacturing Standard	BS EN 1340:2003
Density	2350 kg/m³
GWP (total) kgCO2e	12.12 kgCO2e/unit
Dutch Ref.	PWS-EINDBANDEN-25-13x24xL100-HD-RECHTS
Type	End
End Style	HD
Profile	250-130x240
Position	Right
Face	Splay
Face Angle	26°
Return Angle	-
Radius	-
Number per 360	-
Slope Angle	-
Slope Gradient	-

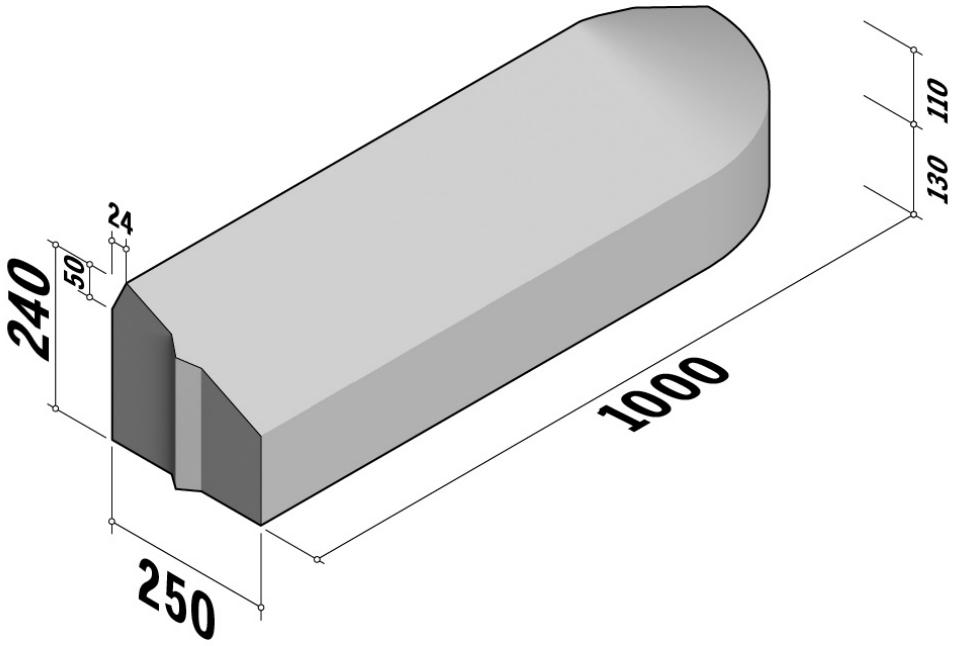

Active Travel Kerbs are available in a range of colours, finishes and materials.

Specification & technical data is indicative and subject to change. Images are for illustrative purposes only, details may vary. Some data may vary according to colour / material / finish variation.