Civils & Highways / Active Travel Kerbs / Access

Access 250-130x240

250-130x240 | Straight | L-1000 | Splay | VB

SPECIFICATION

Access 250-130x240 | 250-130x240 | Straight | L-1000 | Splay | VB

SKU: ATK-ACC-008-6682

Material	Concrete, Kellen
Finish	Standard, Optiflex, Lavaro
Size	250-130(w) x 240(d) x 1000(l)
Weight Per Unit	113.7kg
Manufacturing Standard	BS EN 1340:2003
Density	2350 kg/m³
GWP (total) kgCO2e	12.12 kgCO2e/unit
Dutch Ref.	PWS-BANDEN-25-13x24xL100-VB
Type	Straight
End Style	VB
Profile	250-130x240
Position	-
Face	Splay
Face Angle	26°
Return Angle	-
Radius	-
Number per 360	-
Slope Angle	-
Slope Gradient	-

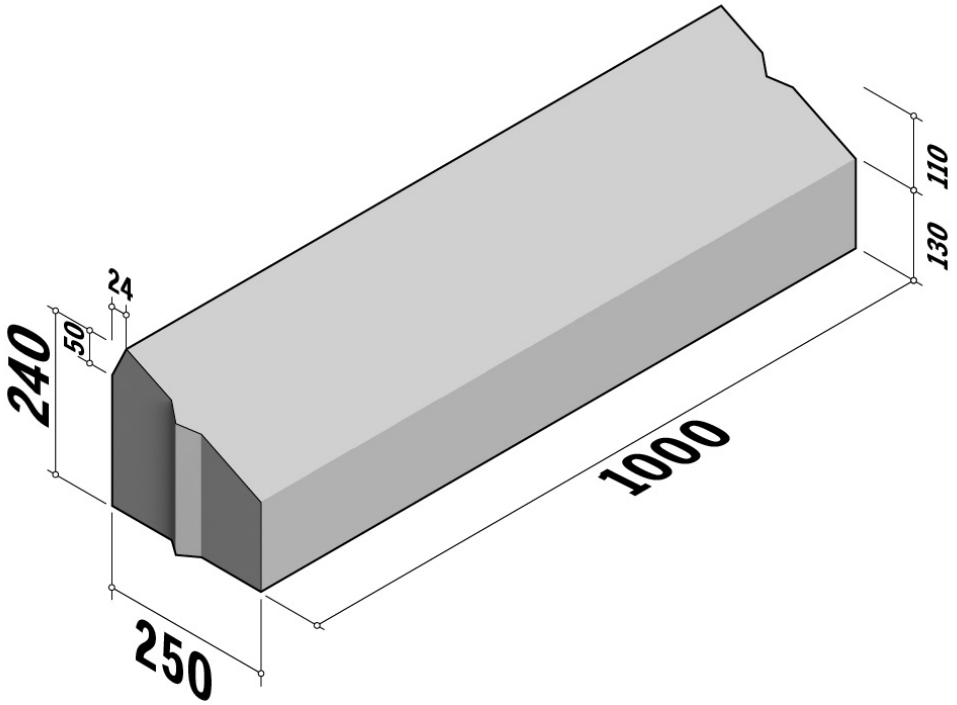

Active Travel Kerbs are available in a range of colours, finishes and materials.

Specification & technical data is indicative and subject to change. Images are for illustrative purposes only, details may vary. Some data may vary according to colour / material / finish variation.