hardscapeproducts.co.uk
01204 565 500
products@hardscape.co.uk

Cycle 70-200x200

70-200x200 | Radius | L-960 | External | 8m | Splay | VB

SPECIFICATION

Cycle 70-200x200 | 70-200x200 | Radius | L-960 | External | 8m | Splay | VB
SKU: ATK-ACC-005-6644

Material	Concrete, Kellen
Finish	Standard Wet Cast, Optiflex, Lavaro
Size	70-200(w) x 200(d) x 960(l)
Weight Per Unit	80.48kg
Manufacturing Standard	BS EN 1340:2003
Density	2350 kg/m³
GWP (total) kgCO2e	8.58 kgCO2e/unit
Dutch Ref.	GELEIDEBOCHTBANDEN-7-20x20xL96-8m-VB
Type	Radius External
End Style	VB
Profile	70-200x200
Position	-
Face	Splay
Face Angle	28°
Return Angle	-
Radius	8m
Number per 360	52
Slope Angle	-
Slope Gradient	-

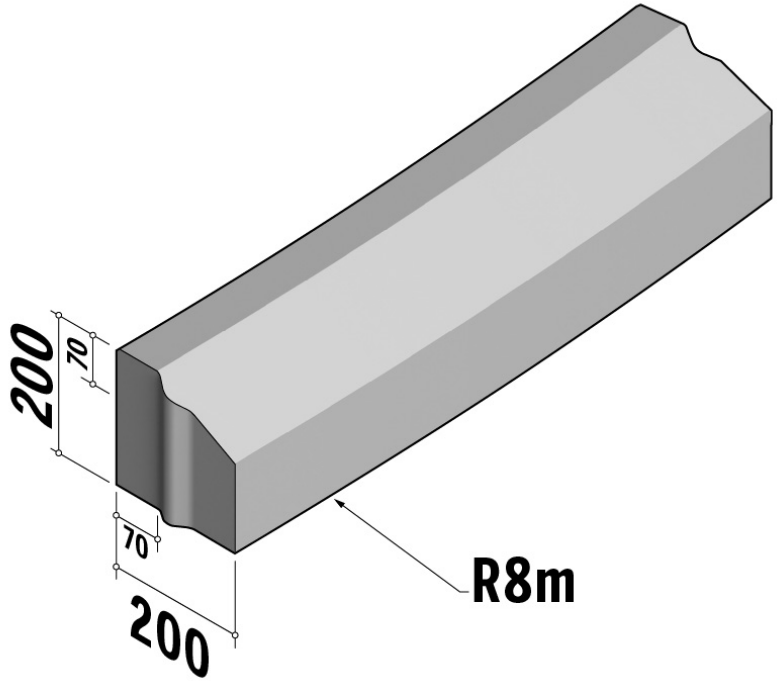

Active Travel Kerbs are available in a range of colours, finishes and materials.

Specification & technical data is indicative and subject to change. Images are for illustrative purposes only, details may vary. Some data may vary according to colour / material / finish variation.