Civils & Highways / Active Travel Kerbs / Cycle

Cycle 50-200x250

50-200x250 | Return Corner | L-350 | External | 90° | Splay | HD

SPECIFICATION

Cycle 50-200x250 | 50-200x250 | Return Corner | L-350 | External | 90° | Splay | HD

SKU: ATK-ACC-004-6625

Material	Concrete, Kellen
Finish	Standard, Optiflex, Lavaro
Size	50-200(w) x 250(d) x 350(l)
Weight Per Unit	86.95kg
Manufacturing Standard	BS EN 1340:2003
Density	2350 kg/m³
GWP (total) kgCO2e	9.26 kgCO2e/unit
Dutch Ref.	HOEKSTUKKEN-5-20x25xL35-90°-HD
Type	Return Corner External
End Style	HD
Profile	50-200x250
Position	-
Face	Splay
Face Angle	18°
Return Angle	90°
Radius	-
Number per 360	-
Slope Angle	-
Slope Gradient	-

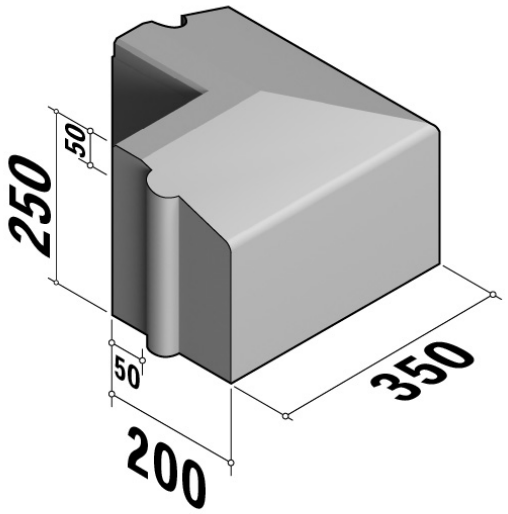

Active Travel Kerbs are available in a range of colours, finishes and materials.

Specification & technical data is indicative and subject to change. Images are for illustrative purposes only, details may vary. Some data may vary according to colour / material / finish variation.